Combinational Circuit Verification using Strong Nullstellensatz

Overcoming the Complexity of Gröbner Bases for Efficient Verification over $\mathbb{F}_{2^k}$

Priyank Kalla

Associate Professor
Electrical and Computer Engineering, University of Utah
kalla@ece.utah.edu
http://www.ece.utah.edu/~kalla

Nov 8, 2017 - onwards

What we have learnt so far...

Theorem (Weak NullStellensatz)

Let $\overline{\mathbb{F}}$ *be an algebraically closed field. Given ideal* $J \subset \overline{\mathbb{F}}[x_1, \ldots, x_n]$, $V_{\overline{\mathbb{F}}}(J) = \emptyset \iff J = \overline{\mathbb{F}}[x_1, \ldots, x_n] \iff 1 \in J \iff$ $reducedGB(J) = \{1\}$.

Theorem (Regular Nullstellensatz)

Let $\overline{\mathbb{F}}$ *be an algebraically closed field. Let* $J = \langle f_1, \ldots, f_s \rangle \subset \overline{\mathbb{F}}[x_1, \ldots, x_n]$. *Let another polynomial* f **vanish** *on* $V_{\overline{\mathbb{F}}}(J)$, *so* $f \in I(V_{\overline{\mathbb{F}}}(J))$. *Then,* $\exists m \in \mathbb{Z}_{\geq 1}$ *s.t.*

$$f^m \in J,$$

and conversely.

Theorem (The Strong Nullstellensatz)

Over an algebraically closed field $I(V(J)) = \sqrt{J}$

Radical Membership....

- Given J, we cannot easily find generators of $\sqrt{J}$
- But we can test for membership in $\sqrt{J}$
  - $f \in \sqrt{J} \iff \text{reducedGB}(J + \langle 1 - y \cdot f \rangle) = \{1\}$

Nullstellensatz over $\mathbb{F}_q$

Theorem (Weak Nullstellensatz over $\mathbb{F}_{2^k}$)

Let ideal $J = \langle f_1, \ldots, f_s \rangle \subset \mathbb{F}_{2^k}[x_1, \ldots, x_n]$ be an ideal. Let $J_0 = \langle x_1^{2^k} - x_1, \ldots, x_n^{2^k} - x_n \rangle$ be the ideal of all vanishing polynomials. Then:

$$V_{\mathbb{F}_{2^k}}(J) = \emptyset \iff V_{\overline{\mathbb{F}_{2^k}}}(J + J_0) = \emptyset \iff reducedGB(J + J_0) = \{1\}$$

Theorem ($J + J_0$ is radical)

Over Galois fields $\sqrt{J + J_0} = J + J_0$, i.e. $J + J_0$ is a radical ideal.

Theorem (Strong Nullstellensatz over $\mathbb{F}_q$)

$$I(V_{\mathbb{F}_q}(J)) = I(V_{\overline{\mathbb{F}_q}}(J + J_0)) = \sqrt{J + J_0} = J + J_0$$

Verification Formulation: The Mathematical Problem

- Given specification polynomial: $f : Z = A \cdot B \pmod{P(x)}$ over $\mathbb{F}_{2^k}$, for given k, and given $P(x)$, s.t. $P(\alpha) = 0$
- Given circuit implementation C
  - Primary inputs: $A = \{a_0, \ldots, a_{k-1}\}, B = \{b_0, \ldots, b_{k-1}\}$
  - Primary Output $Z = \{z_0, \ldots, z_{k-1}\}$
  - $A = a_0 + a_1\alpha + a_2\alpha^2 + \cdots + a_{k-1}\alpha^{k-1}$
  - $B = b_0 + b_1\alpha + \cdots + b_{k-1}\alpha^{k-1}$, $Z = z_0 + z_1\alpha + \cdots + z_{k-1}\alpha^{k-1}$
- Does the circuit C implement f?

Mathematically:

- Model the circuit (gates) as polynomials: $f_1, \ldots, f_s$
  $J = \langle f_1, \ldots, f_s \rangle \subset \mathbb{F}_{2^k}[x_1, \ldots, x_n]$
- Does f agree with solutions to $f_1 = f_2 = \cdots = f_s = 0$?
- Does f vanish on the Variety $V_{\mathbb{F}_q}(J)$?
- Is $f \in I(V_{\mathbb{F}_q}(J)) = J + J_0$ or is $f \xrightarrow{GB(J+J_0)}_+ 0$?

Example Formulation

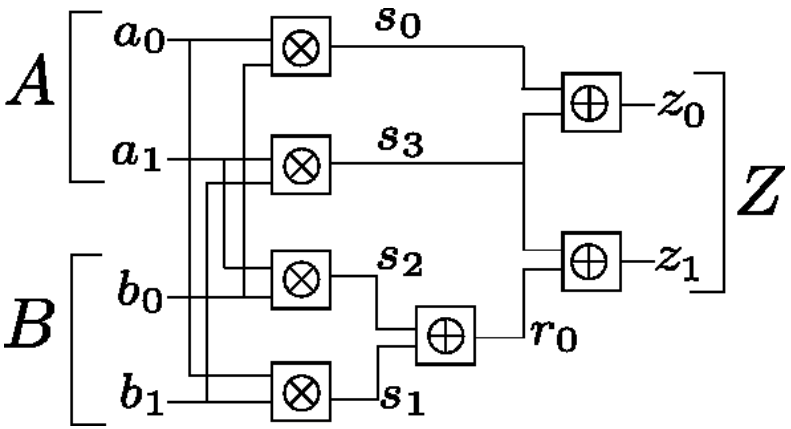

Gates as polynomials

$\mathbb{F}_2 \subset \mathbb{F}_{2^k}$:

Ideal J :

$$z_0 = s_0 + s_3; \mapsto f_1 : z_0 + s_0 + s_3$$

$$s_0 = a_0 \cdot b_0; \mapsto f_2 : s_0 + a_0 \cdot b_0$$

$$\vdots$$

$$A + a_0 + a_1\alpha;\ B + b_0 + b_1\alpha;\ Z + z_0 + z_1\alpha$$

Ideal J_0:

$z_0^2 - z_0, s_0^2 - s_0,$

$\vdots$

$A^{2^k} - A, B^{2^k} - B,$

$Z^{2^k} - Z$

Complexity of Gröbner Basis

- Complexity of Gröbner basis
  - Degree of polynomials in G is bounded by $2(\frac{1}{2}d^2 + d)^{2^{n-1}}$ [1]
  - Doubly-exponential in n and polynomial in the degree d
- This is the complexity of the GB problem, not of Buchberger's algorithm – that's still a mystery
- For $J \subset \mathbb{F}_q[x_1, \ldots, x_n]$, Complexity $GB(J + J_0) : q^{O(n)}$ (Single exponential)
- Improving Buchberger's algorithm:
  - Improve term ordering (heuristics)
  - Get to all $S(f, g) \xrightarrow{G}_+ 0$ quickly; i.e. arrive at a GB quickly (hard to predict)
  - Improve the implementation of polynomial division; ideas proposed by *Faugére* in the F_4 algorithm

Complexity of Gröbner Basis and Term Orderings

- For $J \subset \mathbb{F}_q[x_1, \ldots, x_n]$, Complexity $GB(J + J_0) : q^{O(n)}$
- GB complexity very sensitive to **term ordering**
- A term order has to be imposed for systematic polynomial computation

Let $f = 2x^2yz + 3xy^3 - 2x^3$

- LEX $x > y > z$: $\quad f = -\mathbf{2x^3} + 2x^2yz + 3xy^3$
- DEGLEX $x > y > z$: $\quad f = \mathbf{2x^2yz} + 3xy^3 - 2x^3$
- DEGREVLEX $x > y > z$: $\quad f = \mathbf{3xy^3} + 2x^2yz - 2x^3$

Recall, S-polynomial depends on term ordering:

$$S(f, g) = \frac{L}{lt(f)} \cdot f - \frac{L}{lt(g)} \cdot g; \qquad L = \text{LCM}(lm(f), lm(g))$$

Effect of Term Orderings on Buchberger's Algorithm

The Product Criteria

If $lm(f) \cdot lm(g) = LCM(lm(f), lm(g))$, then $S(f,g) \xrightarrow{G'}_{+} 0$.

LEX: $x_0 > x_1 > x_2 > x_3$

- $f = x_0x_1 + x_2$, $g = x_1x_2 + x_3$
- $lm(f) = x_0x_1$; $lm(g) = x_1x_2$
- $S(f,g) \xrightarrow{G'}_{+} x_0x_3 + x_2^2$

LEX: $x_3 > x_2 > x_1 > x_0$

- $f = x_2 + x_0x_1$, $g = x_3 + x_1x_2$
- $lm(f) = x_2$; $lm(g) = x_3$, $S(f,g) \xrightarrow{G'}_{+} 0$

"Obviate" Buchberger's algorithm... really?

Find a "term order" that makes ALL $\{lm(f),\ lm(g)\}$ relatively prime.

Product Criteria and Gröbner Bases

Recall Buchberger's theorem

The set $G = \{g_1, \ldots, g_t\}$ is a Gröbner basis **iff** for all pairs $(f, g) \in G,\ S(f, g) \xrightarrow{G}_{+} 0$

- If we can make leading monomials of all pairs $lm(f), lm(g)$ relatively prime, then all $Spoly(f, g)$ reduce to 0
- This would imply that the polynomials already constitute a Gröbner basis
- No need to compute a GB, may be able to circumvent the GB complexity issues
- Can a term order be derived that makes leading monomials of all polynomials relatively prime?
  - For an "acyclic" circuit, make the gate output variable x_i greater than all variables x_j that are inputs to the gate

For Circuits, such an order can be derived

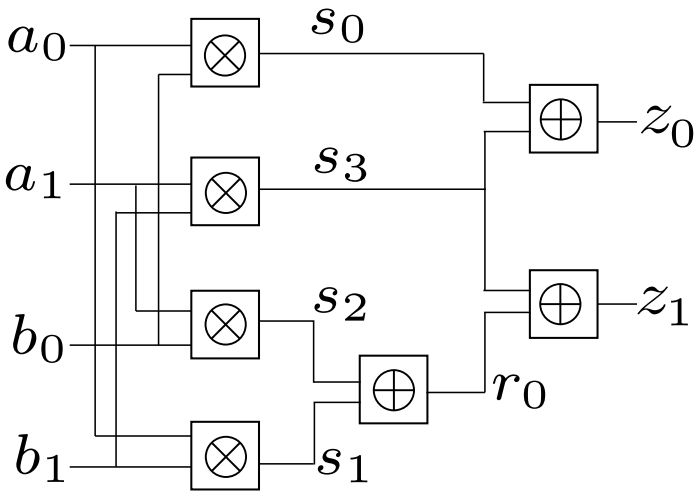

$f_1 : s_0 + a_0 \cdot b_0;$ $f_2 : s_1 + a_0 \cdot b_1;$ $f_3 : s_2 + a_1 \cdot b_0;$

$f_4 : s_3 + a_1 \cdot b_1;$ $f_5 : r_0 + s_1 + s_2;$ $f_6 : z_0 + s_0 + s_3$

$f_7 : z_1 + r_0 + s_3;$ $f_8 : A + a_0 + a_1\alpha;$ $f_9 : B + b_0 + b_1\alpha$

$f_{10} : Z + z_0 + z_1\alpha;$

- Perform a Reverse Topological Traversal of the circuit, order the variables according to their reverse topological levels
- LEX with $Z > \{A > B\} > \{z_0 > z_1\} > \{r_0 > s_0 > s_3\} > \{s_1 > s_2\} > \{a_0 > a_1 > b_0 > b_1\}$
- This makes every gate output a leading term, and $\{f_1, \ldots, f_{10}\}$ is a Gröbner basis

This term order also renders a Gröbner Basis of $J + J_0$

Using the Topological Term Order:

- $F = \{f_1, \ldots, f_s\}$ is a Gröbner Basis of $J = \langle f_1, \ldots, f_s \rangle$
- $F_0 = \{x_1^q - x_1, \ldots, x_n^q - x_n\}$ is also a Gröbner basis of J_0 (these polynomials also have relatively prime leading terms)
- But we have to compute a Gröbner Basis of $J + J_0 = \langle f_1, f_2 \ldots, f_s, \quad x_1^q - x_1, \ldots, x_n^q - x_n \rangle$
- It turns out that $\{f_1, f_2 \ldots, f_s, \quad x_1^q - x_1, \ldots, x_n^q - x_n\}$ is a Gröbner basis!!
- From our circuit: $f_i = x_i + tail(f_i) = x_i + P$
- Vanishing polynomials $x_i^q - x_i$ with same variable x_i
- Only pairs to consider: $S(f_i, \quad x_i^q - x_i)$ in Buchberger's Algorithm
- All other pairs will have relatively prime leading terms, which will reduce to 0 modulo G

This term order renders a Gröbner basis by construction

So, let us compute $S(f_i = x_i + P, \quad x_i^q - x_i)$:

$$S(f_i = x_i + P, \quad x_i^q - x_i) = x_i^{q-1}P + x_i$$

$$x_i^{q-1}P + x_i \xrightarrow{x_i+P} x_i^{q-2}P^2 + x_i \xrightarrow{x_i+P} \ldots \xrightarrow{x_i+P} P^q - P \xrightarrow{J_0}_+ 0$$

Since $P^q - P$ is a vanishing polynomial, $P^q - P \in J_0$ and $P^q - P \xrightarrow{J_0}_+ 0$

Conclusion: The set of polynomials
$F \cup F_0 = \{f_1, \ldots, f_s, \quad x_i^q - x_i, \ldots, x_n^q - x_n\}$ is itself a Gröbner basis due to the reverse topological term order derived from the circuit!

Our Minimal Gröbner Basis

Conclusion:

- Our term order makes $G = \{f_1, \ldots, f_s, x_1^q - x_1, \ldots, x_n^q - x_n\}$ a Gröbner Basis
- This GB$(J + J_0)$ can be further simplified (made minimal)
  - Two types of polynomials: $f_i = x_i + P,\ g_i = x_i^q - x_i$
  - Primary inputs bits are never a leading term of any polynomial
  - Primary inputs are not the output of any gate
- For $x_i \notin$ primary inputs, $f_i = x_i + P$ divides $x_i^q - x_i$; remove $x_i^q - x_i$
- Keep $J_0 = \langle x_i^2 - x_i : x_i \in \text{primary input bits} \rangle$

Our term order makes $G = \{f_1, \ldots, f_s,\ \ x_{PI}^2 - x_{PI}\}$ a minimal Gröbner basis by construction!

Verify the circuit only by a reduction: $f \xrightarrow{G}_+ 0$?

Our Overall Approach

- Given the circuit, perform reverse topological traversal
- Derive the term order to represent the polynomials for every gate
- The set: $\{F, F_0\} = \{f_1, \ldots, f_s, \quad x_i^2 - x_i : x_i \in X_{PI}\}$ is a minimal Gröbner Basis
- Obtain: $f \xrightarrow{F, F_0}_+ r$
- If $r = 0$, the circuit is verified correct
- If $r \neq 0$, then r contains only the primary input variables
- Any SAT assignment to $r \neq 0$ generates a counter-example
- Counter-example found in no time as r is simplified by Gröbner basis reduction

Move the complexity to that of Polynomial Division

Is this Magic? Or have I told you the full story?

- Reduce x^n modulo $\langle x + P \rangle$, how many cancellations?
  - Requires raising P to the nth power
  - P is the $tail(f_i)$
  - Depending upon n, this can become complicated
- **Reduce** this **minimal** GB $G = \{F, F_0\}$, what does it look like?
  - $f_i = x_i + \text{tail}(f_i)$, where $\text{tail}(f_i) = P(x_j), x_i > x_j$
  - There exists $f_j = x_j + \text{tail}(f_j)$, where $f_j \mid P(x_j)$
  - All non-PI variables x_j can be canceled in this reduction
  - Reduction results in GB G with only primary input variables, potentially explosive

This approach should work for specification polynomials f with low degree terms

Experiments: Correctness Proof, Miter Mastrovito v/s Montgomery Multipliers

Table: Verification Results of SAT, SMT, BDD, ABC.

	Word size of the operands k-bits		
Solver	8	12	16
MiniSAT	22.55	*TO*	*TO*
CryptoMiniSAT	7.17	16082.40	*TO*
PrecoSAT	7.94	*TO*	*TO*
PicoSAT	14.85	*TO*	*TO*
Yices	10.48	*TO*	*TO*
Beaver	6.31	*TO*	*TO*
CVC	*TO*	*TO*	*TO*
Z3	85.46	*TO*	*TO*
Boolector	5.03	*TO*	*TO*
SimplifyingSTP	14.66	*TO*	*TO*
ABC	242.78	*TO*	*TO*
BDD	0.10	14.14	1899.69

Experimental Results: Correctness Proof

Verify a specification polynomial f against a circuit C by performing the test $f \xrightarrow{J+J_0}_+ 0$?

Table: Verify bug-free and buggy Mastrovito multipliers. SINGULAR computer algebra tool used for division.

Size k-bits	32	64	96	128	160	163
#variables	1155	4355	9603	16899	26243	27224
#polynomials	1091	4227	9411	16643	25923	26989
#terms	7169	28673	64513	114689	179201	185984
Compute-GB:	93.80	*MO*	*MO*	*MO*	*MO*	*MO*
Ours: Bug-free	1.41	112.13	758.82	3054	9361	16170
Ours: Bugs	1.43	114.86	788.65	3061	9384	16368

Why does Compute-GB (SINGULAR) run out of memory?

Improve GB-reduction: F_4-style reduction

New algorithm to compute a Gröbner basis by J.C. Faugère: F_4

- Buchberger's algorithm $S(f,g) \xrightarrow{G}_+ r$
- Instead, compute a "set" of $S(f,g)$ in one-go
- Reduces them "simultaneously"
- Significant speed-up in computing a Gröbner basis
- Models the problem using sparse linear algebra
- Gaussian elimination on a matrix representation of the problem

Our term order: already a Gröbner basis. We only need F_4-style reduction: $f \xrightarrow{F,F_0}_+ r$

F_4-style reduction on a Matrix

- Objective: $f : Z + A \cdot B$, compute $f \xrightarrow{f_1,\ldots,f_s}_+ r$
- Find a polynomial f_i that divides f, or "cancels" $LT(f)$
- Construct a matrix: rows = polynomials, columns = monomials, entries = coefficient of monomial present in the polynomial
  - This matrix is constructed iteratively
  - The specification polynomial f is inserted into the first row
  - Maintain the specified term order in the matrix
  - Iterate over i, the list of monomials generated/utilized in the division process
  - Find a polynomial f_j s.t. $lt(f_j)$ cancels the ith monomial (column) of the matrix
  - Insert $\frac{X_i}{lm(f_j)} \cdot f_j$ as the new row in the matrix
  - Update the entries in the matrix subject to the term order

Matrix Construction with an Example

Given $f : Z + AB$ over $\mathbb{F}_{2^2}$ with $P(\alpha) = \alpha^2 + \alpha + 1 = 0$.

Polynomials of the circuit, corresponding to ideal J:
$f_1 : A + a_0 + a_1\alpha,\ f_2 : B + b_0 + b_1\alpha,\ f_3 : Z + z_0 + z_1\alpha,$
$f_4 : r_0 + a_0b_1 + a_1b_0,\ f_5 : z_0 + a_0b_0 + a_1b_1,\ f_6 : z_1 + r_0 + a_1b_1$

Compute $f \xrightarrow{f_1,\ldots,f_6}_+ r$

Term order: LEX with $Z > A > B > z_0 > z_1 > r_0 > a_0 > a_1 > b_0 > b_1$

Matrix Construction *(Contd.)*

Problem setup:

- Insert $f : Z + AB$ as the first row of the matrix M
- Note that $Z > AB$ in our monomial order
- Let M_L denote the list of monomials; these will correspond to the columns of the matrix M
- Matrix M at the first step:

$$\begin{array}{cc} & \begin{array}{cc} Z & AB \end{array} \\ f & \begin{pmatrix} 1 & 1 \end{pmatrix} \end{array}$$

Matrix Construction *(Contd.)*

- Set $i = 1$
- Find a polynomial f_j from $f_1, \ldots, f_6$ s.t. $lm(f_j) \mid \text{monomial}[i]$ represented in the ith column
- Clearly, $f_j = f_3 = Z + z_0 + z_1\alpha$
- Division: $f \xrightarrow{f_j}_+ r = f - \frac{lt(f)}{lt(f_j)} \cdot f_j = f - \frac{lc(f)}{lc(f_j)} \frac{lm(f)}{lm(f_j)} \cdot f_j$
- Ignore the coefficients, they will be resolved/computed as coefficients in the matrix M
- Compute: $f \xrightarrow{f_j}_+ r = f - \frac{lm(f)}{lm(f_j)} \cdot f_j$
  - The computation $(Z + AB) - \frac{Z}{Z} \cdot (Z + z_0 + z_1\alpha)$ gives the monomial list as AB, z_0, z_1
  - These monomials will correspond to the columns of the matrix
  - List of monomials $M_L = M_L \cup \frac{lm(f)}{lm(f_j)} \cdot f_j$

$$\begin{array}{c} \\ f \\ f_3 \end{array} \begin{array}{c} \begin{array}{cccc} Z & AB & z_0 & z_1 \end{array} \\ \begin{pmatrix} 1 & 1 & 0 & 0 \\ 1 & 0 & 1 & \alpha \end{pmatrix} \end{array}$$

Matrix Construction *(Contd.)*

- Set $i = i + 1 = 2$
- Find a polynomial f_j from $f_1, \ldots, f_6$ s.t. $lm(f_j) \mid \text{monomial}[i]$ represented in the ith column
- $\text{monomial}[2] = AB$
- Clearly, $f_j = f_1 = A + a_0 + a_1\alpha$
- Monomials required in cancellation (division) of AB
  - $AB - \frac{AB}{lm(f_j)} \cdot f_j = (AB) - B(A + a_0 + a_1\alpha)$
  - Only interested in the monomials utilized in this division process
  - Update $M_L = M_L \cup \{\text{monomials of } \frac{AB}{A} \cdot f_1\}$

$$
\begin{array}{c}
 \\ f \\ f_3 \\ Bf_1
\end{array}
\begin{array}{c}
\begin{array}{cccccc} Z & AB & Ba_0 & Ba_1 & z_0 & z_1 \end{array} \\
\begin{pmatrix}
1 & 1 & 0 & 0 & 0 & 0 \\
1 & 0 & 0 & 0 & 1 & \alpha \\
0 & 1 & 1 & \alpha & 0 & 0
\end{pmatrix}
\end{array}
$$

Continue in this fashion: F_4-style reduction

- Construct the whole matrix M
- M is completed when monomial ordering reaches primary inputs
- Rows $= \frac{\text{monomials}}{lm(f_j)} \cdot f_j$; Columns $= M_L$, $M(i,j) = coefficients$

$$
\begin{array}{c}
 \\ f \\ f_3 \\ Bf_1 \\ a_0 f_2 \\ a_1 f_2 \\ f_5 \\ f_6 \\ f_4
\end{array}
\begin{array}{c}
\begin{array}{ccccccccccc}
Z & AB & Ba_0 & Ba_1 & z_0 & z_1 & r_0 & a_0 b_0 & a_0 b_1 & a_1 b_0 & a_1 b_1
\end{array} \\
\begin{pmatrix}
1 & 1 & 0 & 0 & 0 & 0 & 0 & 0 & 0 & 0 & 0 \\
1 & 0 & 0 & 0 & 1 & \alpha & 0 & 0 & 0 & 0 & 0 \\
0 & 1 & 1 & \alpha & 0 & 0 & 0 & 0 & 0 & 0 & 0 \\
0 & 0 & 1 & 0 & 0 & 0 & 0 & 1 & \alpha & 0 & 0 \\
0 & 0 & 0 & 1 & 0 & 0 & 0 & 0 & 0 & 1 & \alpha \\
0 & 0 & 0 & 0 & 1 & 0 & 0 & 1 & 0 & 0 & 1 \\
0 & 0 & 0 & 0 & 0 & 1 & 1 & 0 & 0 & 0 & 1 \\
0 & 0 & 0 & 0 & 0 & 0 & 1 & 0 & 1 & 1 & 0
\end{pmatrix}
\end{array}
$$

F_4-style reduction

- Construct the matrix M for polynomial reduction
- Apply Gaussian elimination on M
- Last row = remainder r = result of reduction $= \alpha^2 + \alpha + 1 = 0$

$$
\begin{array}{ccccccccccc}
Z & AB & Ba_0 & Ba_1 & z_0 & z_1 & r_0 & a_0b_0 & a_0b_1 & a_1b_0 & a_1b_1 \\
\end{array}
$$

$$
\begin{pmatrix}
1 & 1 & 0 & 0 & 0 & 0 & 0 & 0 & 0 & 0 & 0 \\
0 & 1 & 0 & 0 & 1 & \alpha & 0 & 0 & 0 & 0 & 0 \\
0 & 0 & 1 & \alpha & 1 & \alpha & 0 & 0 & 0 & 0 & 0 \\
0 & 0 & 0 & \alpha & 1 & \alpha & 0 & 1 & \alpha & 0 & 0 \\
0 & 0 & 0 & 0 & 1 & \alpha & 0 & 1 & \alpha & \alpha & \alpha^2 \\
0 & 0 & 0 & 0 & 0 & \alpha & 0 & 0 & \alpha & \alpha & \alpha^2 + 1 \\
0 & 0 & 0 & 0 & 0 & 0 & \alpha & 0 & \alpha & \alpha & \alpha^2 + \alpha + 1 \\
0 & 0 & 0 & 0 & 0 & 0 & 0 & 0 & 0 & 0 & \alpha^2 + \alpha + 1
\end{pmatrix}
$$

Algorithm for this reduction [2]

Input: $f, F = \{f_1, \ldots, f_s\}$, term order $>$

Output: A matrix M representing $f \xrightarrow{f_1,\ldots,f_s}_+ r$

/*$L =$ set of polynomials, rows of M*/;

L:={f}; i:=1;

M_L:={ monomials of f}; //$M_L =$ the set of monomials, columns of M;

mon:= the ith monomial of M_L;

while $mon \notin PrimaryInputs$ **do**

  Identify $f_k \in F$ satisfying: $lm(f_k)$ can divide mon ;

  /*add polynomial f_k to L as a new row in M */;

  $L := L \cup \frac{mon}{lm(f_k)} \cdot f_k$;

  /*Add monomials to M_L as new columns in M */;

  M_L:=$M_L \cup \{$monomials of $\frac{mon}{lm(f_k)} \cdot f_k\}$;

  $i := i + 1$;

  mon:= the ith monomial of M_L;

end

Gaussian Elimination on M;

return $r =$ last row of M;

Algorithm 1: Generating the Matrix for Polynomial Reduction

Results

Table: Runtime for verifying bug-free and buggy Montgomery multipliers. TO = timeout of 10hrs. Time is given in seconds. $*$ denotes SINGULAR's capacity exceeded.

Operand size k	32	48	64	96	128	163
#variables	1194	2280	4395	6562	14122	91246
#polynomials	1130	2184	4267	6370	13866	89917
#terms	10741	18199	40021	55512	134887	484738
Bug-free (Singular)	1.50	11.03	27.70	1802.75	10919	$*$
Bug-free (F_4)	0.86	4.47	10.11	700.59	4539	18374
Bugs (Singular)	1.52	11.10	28.18	1812.15	11047	$*$
Bugs (F_4)	0.88	4.49	10.12	709.03	4564	17803

F_4-style reduction 2.5X faster than use of Singular

Faugére's motivation

- In practical GB computation, problems have sparsity
  - Look at our matrix M, it is full of 0s
- Such matrices usually have block-triangularity
- Rows of M are often monomial multiples of the same polynomials
- Use "sparse linear algebra"

Further improvements possible: Certainly a MS thesis project

- Matrix based reduction can be parallelized: General Purpose GPU (GP-GPU) computing
- Complexity = construction of M, use of a symbol/hash table to search for f_j s.t. $lm(f_j) \mid \text{monomial}[i]$

In Conclusion

The Key to Success in Design Automation

- Build algorithms and techniques on solid theoretical foundations
- Use all of the mathematical tools at your disposal
- Make sure to exploit circuit structure
- Develop domain-specific implementations
- That's what SAT, BDDs, AIGs do too!

T. W. Dube, "The Structure of Polynomial Ideals and Gröbner bases," *SIAM Journal of Computing*, vol. 19, no. 4, pp. 750–773, 1990.

J. Lv, P. Kalla, and F. Enescu, "Efficient Gröbner Basis Reductions for Formal Verification of Galois Field Arithmetic Circuits," in *IEEE Trans. on CAD*, vol. 32, no. 9, 2013, pp. 1409–1420.

T. Pruss, P. Kalla, and F. Enescu, "Equivalence verification of large galois field arithmetic circuits using word-level abstraction via gröbner bases," in *Proc. Design Automation Conference (DAC)*, 2014.

J. Lv, P. Kalla, and F. Enescu, "Efficient Groebner Basis Reductions for Formal Verification of Galois Field Multipliers," in *IEEE Design, Automation and Test in Europe*, 2012.